LINQ by ELEMENTS

5 in 1 USB-C Multiport Hub
Model #: LQ48002

Product Manual

Package Contents
USB-C Multiport Hub x1,
User Manual x1

www.LINQbyELEMENTS.dk

Thank you for purchasing our 5 in 1 USB-C Multiport Hub.

Please read this user manual carefully and keep it in a safe place for future reference. If you need any assistance, please contact our support team with your product model number and order number of relevant sales channel.

Product Specifications

HDMI Output Port
Up to 4k UHD (3840 x 2160@ 60Hz), supports 1440p / 1080p / 720p / 480p / 360p

USB-A Port
Super Speed USB-A 3.1 Gen 1, Power Supply up to 4.5W Max.

USB-C PD Female Port 1
Charging up to 100W of Power Delivery 3.0 (Only for laptop charging)

USB-C Female Port 2
Super Speed USB-C 3.1 Gen 1, Power Supply up to 4.5W Max. (Only for Data Transfer)

USB-C Male
Compatible with Thunderbolt 3, Make sure that the host USB-C port on your device complies with the USB3.0/3.1 Specification

System Requirements:
Laptop with an available USB-C Port Windows 7/8/10, MacOSX v10.0 or above operating systems

Plug and play:
Yes

Overview

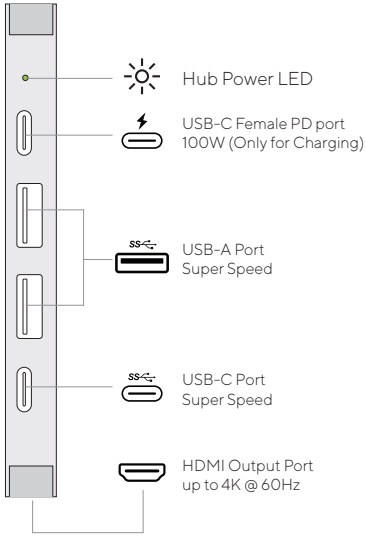

Notes

1. Only one hub is included, power adapters, SD/TF memory cards, cables or other accessories are not included.

2. The 100W charging speed can only be acquired when used with a 100W rated USB-C PD cable.

3. The USB-A Port of this product supports Max. 5V 900mAh total charging output.

4. For stable connection when using high-power devices, connect a PD Power Adaptor to the USB-C female PD port.

5. The USB-C female PD port of this product is only for charging USB-C laptops whose USB-C Port supports USB Power Delivery (PD). The PD USB-C female port of this product does not support data transfer.

6. The USB-C female data port of this product is only for data transfer. The USB-C female data port of this product does not support charging.

7. A 4K capable display and a 4K capable HDMI cable are required to achieve 3840 x 2160 resolution.

Tips

Four ways to help to reduce the USB radio frequency interference to the wireless connection of some laptops.

Option 1: Connect the laptop to a 2.4GHz Wi-Fi network.

Option 2: Connect devices (e.g. mouse and keyboard) to USB 2.0 ports on the laptop.

Option 3: Connect the USB Hub to the laptop with a USB extension cable, keep USB Hub device away from the host computer.

Option 4: Use high-quality shielded devices / cables / connectors.

How to Use

Plug the USB-C male connector of the Hub into the USB-C port on your USB-C laptop.

1. HDMI Output Adapter: Connect to your UHDTV or projector with an HDMI cable via the HDMI output port and watch videos from your USB-C laptop on your TV or other HDMI-enabled devices.

2. SD/TF Card Reader: Insert your memory card into the SD/TF Card Slot to directly access files stored in the SD/TF card on your USB-C laptop. SD/TF memory cards can be used on the hub simultaneously.

3. USB-C Power Delivery: Charge your laptop by plugging the USB-C Charger to the Multiport Hub USB-C Female Power Delivery (PD) port.

4. USB-C Super Speed: Connect your smart phone, tablet, hard drive or other USB-C peripherals via the USB-C 3.1 Port and transfer data between your computer and connected device.

5. USB-A Super Speed: Connect your smart phone, tablet, mouse, keyboard, hard drive or other USB peripherals via the USB-A 3.1 ports and transfer data between your computer and connected device.

Compatibilities

Details compatibility of android devices can be found on our website.

visit:
www.LINQbyELEMENTS.dk